MODULE T1-1828S

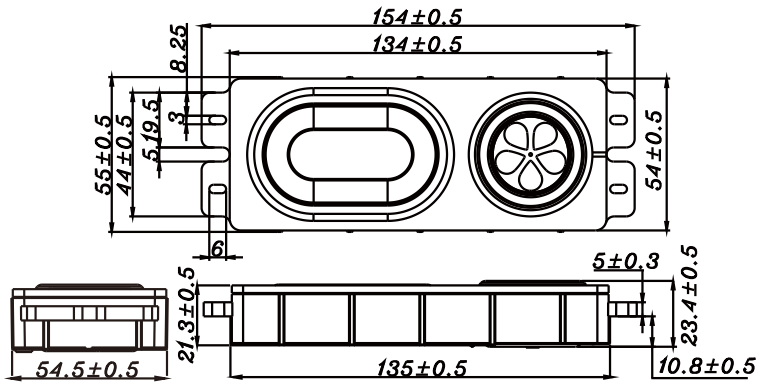

- COMPRERHNSIVE SOLUTION FOR AUDIO DESIGN.
- COMBINE DRIVER, PASSIVE RADIATOR AND BOX AS ONE UNIT, PATENTED.
- SLIM AND TINY, LOW BASS Fs = 78 Hz.
- MODULE COULD BE RESHAPED TO FIT CUSTOMER'S APPLICATION.
- GOOD FOR PORTABLE, SOUNDBAR, MULTIMEDIA... APPLICATION.
- MOUNTING KIT WITH AMPLIFIER IS AVAILABLE.

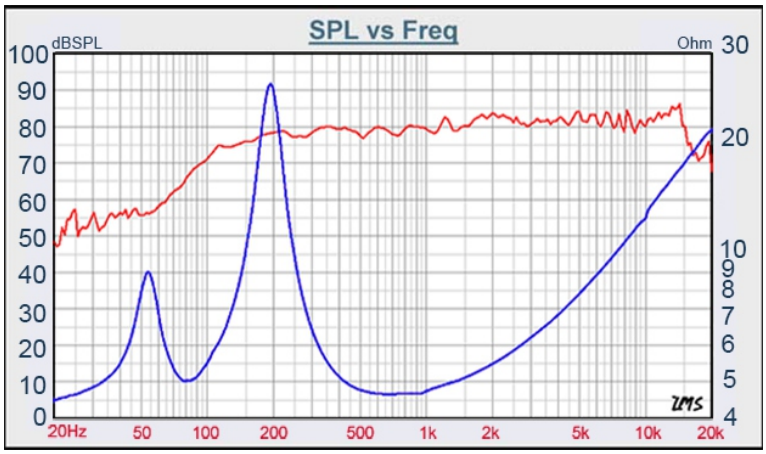

SYSTEM SPECIFICATION

SYSTEM	Passive radiator design
ACTIVE DRIVER	46mm dome shape driver
DIAPHRAGM	Alum. composite with elastomer
HOUSING	PP composite material
FINISH	Black
DIMENSIONS	154 x 55 x 23.4mm
VOICE COIL DIAMETER	28 mm
IMPEDANCE	4 ohm
POWER LOADING	4 W(RMS)
MUSIC POWER	8 W
RESPONSE RANGE	78Hz - 20KHz
SENSITIVITY	80 dB (M / W)
Fs	78 Hz
POWER RECOMMENDED	5 W (RMS)
DESIGN SUGGESTION	High pass filter with 80 Hz, -12dB/oct

TB SPEAKERS

VOICE:886.2.26570282 FAX:886.2.26580166
E-MAIL :info@tb-speaker.com